Ideas for IOT Water Quality

Ideas from Paul Le Curieux

Designs

Bank mounted

Direct mounted in water

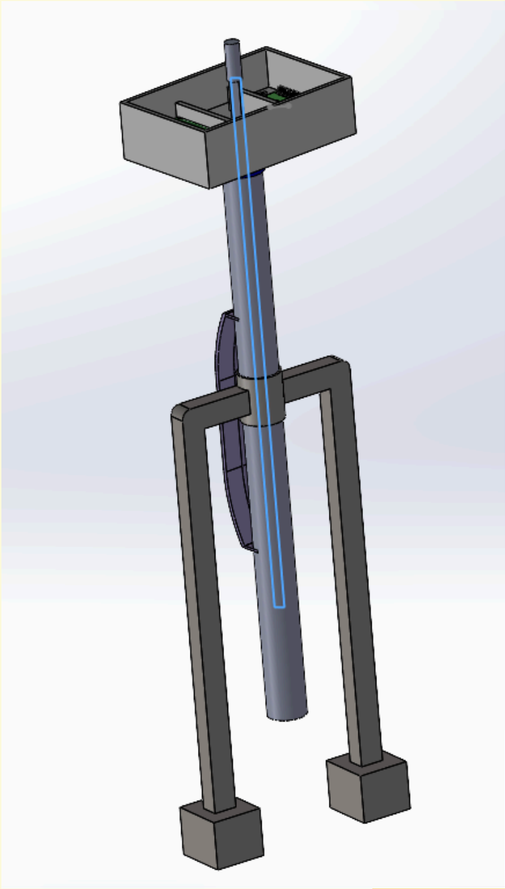

Ideas

Bank mounted

- Ground-anchored enclosure (land screw) housing the electronics
- Connected vertical pipe protecting the sensors
- Modular sensor carriers inside the pipe
- Each module ≤ 1.2 m for easy installation and removal

Direct mounted in water

- Designed for direct installation in water (wetlands)
- Enclosure containing all electronics
- Movable internal rod holding the sensors
- Sensors can be inserted and removed by hand or remotely

References

Enclosure

main setup

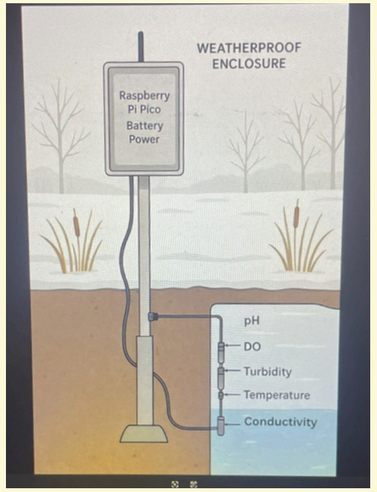

main idea

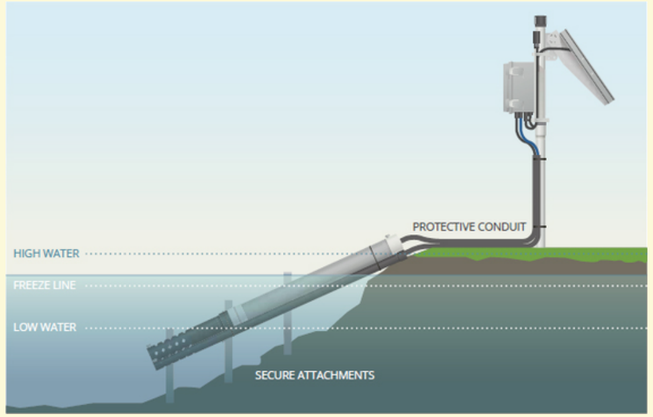

tube support

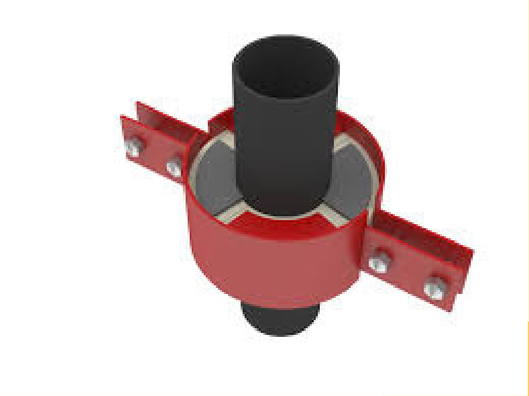

solar panel

land screw

locking mechanism

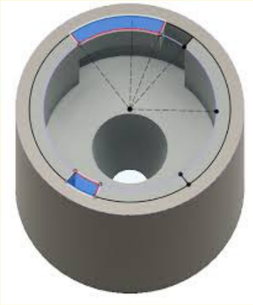

protection from debris

Thank you

paul.le.curieux@student.lab.fi

+358 40 5939900